Euronda Alle®

EN

Your surgical field
Simply perfect

Euronda®
Alle

Euronda®

Over 40 years of protection in dentistry

Euronda, synonymous with outstanding protection in the dental field for over 40 years. With an Italian origin and an international vocation, it has 4 branches operative and sells products in over 100 countries worldwide. Euronda is one of the benchmark companies for infection control in the dental sector. Production includes two specific product lines, plus Euronda Alle® sterile disposable items.

Euronda Monoart®, a wide range of disposable products, accessories and personal protective equipment that teams maximum product quality with vibrant colours.
Euronda Pro System, the Euronda Total Protection System.
A complete line of products to optimise the whole sterilisation process and make it safer. All Euronda products guarantee maximum quality and protection standards for dentists, professionals and patients.

Index

Sterile sets

8 Patient Set
9 Doctor Set
10 Assistant Set
11 Surgery Set
12 Implant Set
13 Base Set
14 Protection Set
15 Drapes Set

Gowns

18 Softesse® gown
20 SMS Microfiber gown
22 Water-repellent gown
24 SMS Microfiber surgical pajamas

Other items of protection

28 Face mask protection 3
29 Face mask protection 4
30 Softesse® cap
30 Round cap with elastic
31 Bandana
31 Surgical cap with adjustable ties
32 Cube glasses
33 Stretch glasses
34 Operator visor
36 Disposable latex gloves
37 Waterproof shoe covers

Sterile drapes

40 Drapes for Mayo and instrument tables
41 Surgical drapes
42 Surgical drapes with adhesive side
43 Drape with central adhesive opening
44 Drape with off-centre adhesive opening
45 Drape with U cut without adhesive
46 Drape with U cut and adhesive
47 Drape with U cut without adhesive and adhesive point
48 Softesse® drape
50 Softesse® drape with no panic window

sterile and non-sterile protective products

54 All-purpose bag for radiographic systems
54 Medical adhesive
55 Barrier film
56 Tubing sleeve with inserter
57 Tubing sleeve with adhesive fixing tapes
58 Adhesive film sheets
59 Transparent drapes with adhesive
60 Dentist chair cover

Sterile irrigation lines

64 Mechanical irrigation lines
66 Manual irrigation line

Aspiration systems

70 Surgical aspirators
70 Surgical aspirator tip
71 Aspirator tip
71 Adapter for aspirator tip

Other products

74 Instant ice
75 Sterilization rolls
76 Gusseted sterilization rolls
77 Sterilization pouches
78 Helix Test
78 Bowie & Dick Test
79 Prion Test

Euronda Alle®

Your surgical field
Simply perfect

Alle® is a new line of disposable products designed specifically to create a sterile and uncontaminated surgical field for dental procedures, and to prevent the risk of infection. Alle is a comprehensive line of products aimed at providing dental clinics with the high standards of protection required in operating rooms.

Alle® Sterile sets

Totally safe and practical for all your needs

A complete line of single-use, sterile sets for the protection of dentists, assistants and patients, and for the preparation of surgical fields. These sets have been carefully designed to respond effectively to the needs of all dental surgical operations. The contents of the sets vary based on the type of procedure and consist of multiple sterile products packaged in order of use. These sets satisfy requirements for a variety of procedures in particular, there are three sets designed for gowning, two sets for implantology, two for preparing your operating field, and one that contains every tool needed to deal with any type of surgery.

Comprehensive

The sets satisfy individual needs for all kinds of dental surgery.

Practical

Contents are organised in a practical way and components are arranged in order of use.

Efficient

The sterile sets significantly reduce the time needed to set up your operating field and make it easy to manage your purchases.

Patient Set

Comfort and protection for patients undergoing surgery

Sterile apparel for your patient. A set designed for gowning patients undergoing all types of implant, periodontal, dental surgery and maxillofacial procedures.

S

Sterility

Sterility guaranteed for 5 years from the date of production

Set Code	Content	Size	Material	Pcs
270101	Water-repellent gown with elastic cuffs	One size	Non-woven fabric	1
	Round cap with elastic	One size	Non-woven fabric	1
	Waterproof shoe covers	One size	CPE	2

Doctor Set

A barrier system for everyday procedures

A sterile kit for routine procedures. Set designed specially with the dentist in mind, for brief and medium-length procedures. New composition with gowns in SMS microfibre, guaranteeing greater comfort for professionals.

S

Sterility

Sterility guaranteed for 5 years from the date of production

Set Code	Content	Size	Material	Pcs
270126	Microfiber gown with cotton cuffs	L	Non-woven fabric	1
	Surgical cap with adjustable ties	One size	Non-woven fabric	1
	Monoart® facemask PTC 3	One size	Non-woven fabric	1
	Waterproof shoe covers	One size	CPE	2

Assistant Set

Safe and practical for your surgical team

Perfect for aiding professionals in total safety. Specially designed to be used by assistants for short and medium-length procedures.

S

Sterility

Sterility guaranteed for 5 years from the date of production

Set Code	Content	Material	Size	Pcs
270103	Water-repellent gown with cotton cuffs	Non-woven fabric	One size	1
	Round cap with elastic	Non-woven fabric	One size	1
	Monoart® facemask PTC 3	Non-woven fabric	One size	1
	Waterproof shoe covers	CPE	One size	2

Surgery Set

Total protection for outstanding surgery

Total protection for successful surgery. The new Alle® surgical set is designed to optimise surgical operations. Specially designed to protect professionals, assistants, patients and equipment.

S

Sterility

Sterility guaranteed for 5 years from the date of production

Set Code	**Content**	**Material**	**Size** cm	**Pcs**
270123	Microfiber gown with cotton cuffs	SMS	L	1
	Water-repellent gown with cotton cuffs	Non-woven fabric	One size	1
	Drape with U cut with adhesive	Non-woven fabric + polyethylene	100x150 cut 6,5x30	1
	Surgical drape with adhesive side	Non-woven fabric + polyethylene	75x90	2
	Tubing sleeve with inserter	LDPE	120x7	1
	Adhesive film sheets	adhesive polyethylene	20x20	2
	Transparent drape with adhesive side	LDPE	40x50	1
	Red plastic bag for contaminated waste	polyethylene	24x30	1

Implant Set

Special protection for complex procedures

The best possible protection for all implant procedures. Specially designed for implant surgery. Produced in conjunction with experts in dental surgery.

S

Sterility

Sterility guaranteed for 5 years from the date of production

Set Code	**Content**	**Material**	**Size** cm	**Pcs**
270105	Water-repellent gown with cotton cuffs	Non-woven fabric	One size	3
	Surgical cap with adjustable ties	Non-woven fabric	One size	1
	Round cap with elastic	Non-woven fabric	One size	2
	Monoart® facemask PTC 3	Non-woven fabric	One size	3
	Surgical drape	Non-woven fabric + polyethylene	75x90	1
	Surgical drape	Non-woven fabric + polyethylene	50x50	2
	Drape with central opening without adhesive	Non-woven fabric + polyethylene	50x75-Ø6	1
	Hand Towels - Dry paper	Cellulose	30x40	2

Base Set

Essential for operating in total safety

All the essentials you need to begin any procedure. Specially designed for implant surgery. The product of joint studies with experts in dental surgery. A modified version of the Implant Set.

S

Sterility

Sterility guaranteed for 5 years from the date of production

Set Code	**Content**	**Material**	**Size** cm	**Pcs**
270106	Water-repellent gown with cotton cuffs	Non-woven fabric	One size	1
	Water-repellent gown with elastic cuffs	Non-woven fabric	One size	2
	Surgical cap with adjustable ties	Non-woven fabric	One size	1
	Round cap with elastic	Non-woven fabric	One size	2
	Facemask with ties	Non-woven fabric	One size	1
	Monoart® facemask PTC 3	Non-woven fabric	One size	2
	Drape with U cut with adhesive	Non-woven fabric + polyethylene	75x90 / cut 11x9	1
	Surgical drape	Non-woven fabric + polyethylene	50x75	2
	Tubing sleeve with elastics	polyethylene	120x7	1

Protection Set

Safety for patients and safe surgical fields

Protection for patients and working environment. A selection of sterile drapes and protective items to cover and prepare surfaces and patients during surgical procedures.

S

Sterility

Sterility guaranteed for 5 years from the date of production

Set Code	**Content**	**Material**	**Size** cm	**Pcs**
270107	Drape with U cut without adhesive	Non-woven fabric + polyethylene	100x150 cut 11x30	1
	Surgical drape	Non-woven fabric + polyethylene	75x90	1
	Surgical drape	Non-woven fabric + polyethylene	50x75	2
	Tubing sleeve with adhesive	polyethylene	120x7	2

Drapes Set

Functional and practical for any requirement

Sterile drapes ready for any need. A set of drapes to prepare areas for surgery, designed to cover both surfaces and patients.

S

Sterility

Sterility guaranteed for 5 years from the date of production

Set Code	**Content**	**Material**	**Size** cm	**Pcs**
270108	Surgical drape	Non-woven fabric + polyethylene	50x75	2
	Drape with U cut with adhesive	Non-woven fabric + polyethylene	50x75 / cut 11x9	1

Alle® Gowns

The first level of defence for dentists and assistants

Barrier systems (sterile disposable gowns and drapes) are used during surgical procedures to prevent the migration of micro-organisms between sterile and non-sterile zones. When worn properly, they help to keep your operating fields sterile. Comfortable, soft, waterproof and breathable, they provide the utmost comfort during procedures. Some disposable barrier systems are available in non-sterile versions as well, to provide comfort for all professionals and patients.

For any need

Available in liquid-resistant nonwoven fabric, SMS microfibre and breathable Softesse material to provide the desired level of comfort.

Versatile

A comprehensive range of sterile gowns to protect dentists, patients and whole surgery teams.

Traceable

Packed with peel-off labels to provide maximum traceability and security for dental clinics.

Softesse® gown

Outstanding comfort for complex operations

Softesse® nonwoven fabric is the most advanced material available on the market. This highly breathable gown is exceptionally comfortable and very water-resistant. The surgical pleat, double lace fastening (inside and out), cotton cuffs and Velcro neck strap guarantee the perfect fit.
Comes with two sterile paper hand towels.

Classification
MD class I s

Material
Non-woven fabric
Softesse 70 g/m²
latex free

Available size
M, L, XL

Color
Light Bluee

Sterility
Sterility guaranteed for 5 years from the date of production

Breathable

Prevents your body temperature from increasing thanks to the highly breathable fabric, which is also very water-resistant.

Comfortable

The Softesse nonwoven fabric guarantees exceptional comfort. It's perfect for lengthy operations and treating at-risk patients.

Traceable

Each gown is packed in a sterile medical blister pack and complete with a double adhesive label with barcode to provide maximum traceability.

Details

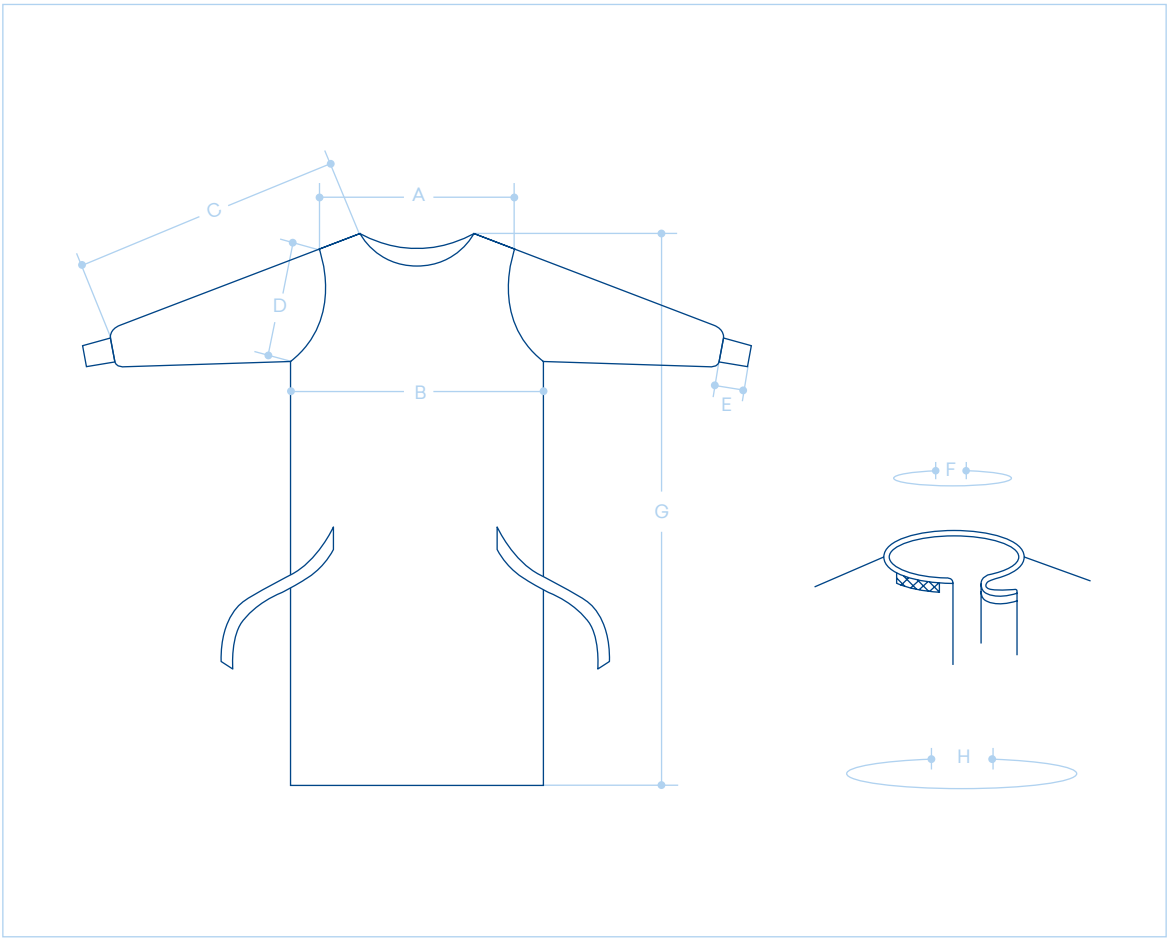

Size		M	L	XL
Code		270408	270409	270410
Pieces		12	12	12
A	**Shoulder width**	57 cm	59 cm	66 cm
B	**Thorax width**	63 cm	65 cm	75 cm
C	**Total arm length**	76 cm	79 cm	88 cm
D	**Arm width**	29 cm	29 cm	29 cm
E	**Cuff length**	7 cm	7 cm	7 cm
F	**Neck circumference**	71 cm	74 cm	75 cm
G	**Maximum length of gown**	128 cm	133 cm	134 cm
H	**Total circumference of gown**	149 cm	148 cm	160 cm

SMS Microfiber gown

Light, comfortable and fits perfectly

Made from light, water-repellent SMS microfibre material and complete with cotton cuffs and surgical pleats. The double lace fastening (inside and out) and Velcro neck strap guarantee the perfect fit. Available in sterile and non-sterile versions, based on your needs. Comes with two sterile paper hand towels.

Classification
MD class I s (sterile)
MD class I (non sterile)

Material
SMS Microfiber 45 gr/m^2
latex free

Available size
M, L, XL

Color
Light Bluee

Sterility
Sterility guaranteed for 5 years from the date of production

Non-sterile version also available

Durable
Perfect for routine, medium-length implant and periodontal procedures.

Comfortable
The unique, enveloping shape provides the perfect fit, with very low risk of the material tearing.

Traceable
Each sterile gown is packed in a sterile medical blister pack and complete with a double adhesive label with barcode to provide maximum traceability.

Details

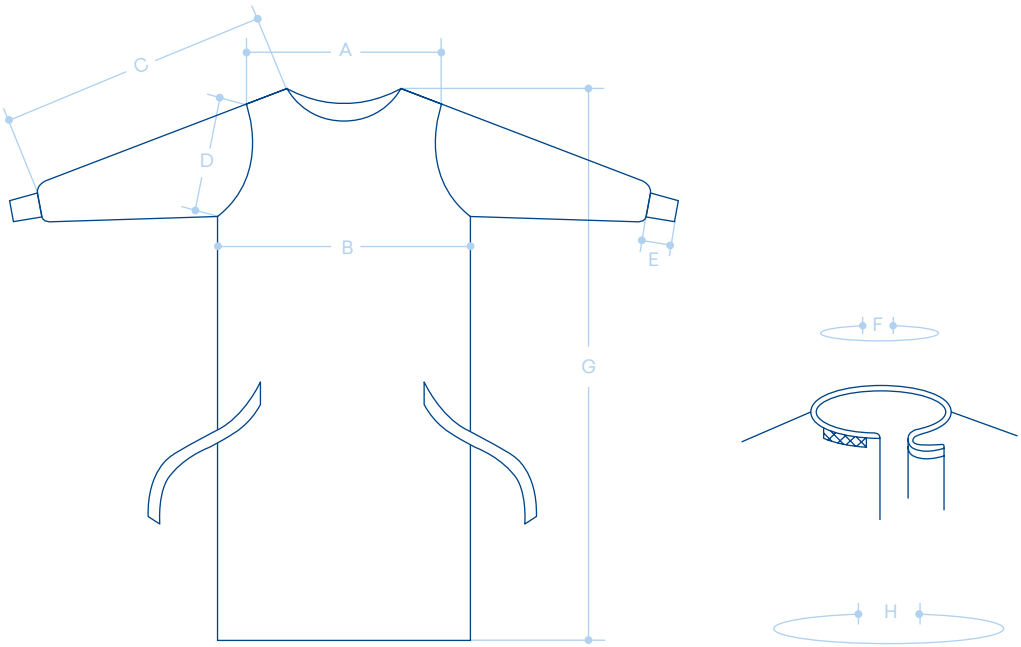

Size		M	L	XL
Code - non sterile		270422	270423	270424
Code - sterile		270405	270406	270407
Pieces		12	12	12
A	**Shoulder width**	56 cm	57 cm	60 cm
B	**Thorax width**	71 cm	73 cm	76 cm
C	**Total arm length**	73 cm	76 cm	79 cm
D	**Arm width**	29 cm	29 cm	29 cm
E	**Cuff length**	7 cm	7 cm	7 cm
F	**Neck circumference**	70 cm	70 cm	71 cm
G	**Maximum length of gown**	112 cm	115 cm	118 cm
H	**Total circumference of gown**	143 cm	148 cm	154 cm

Water-repellent gown

Practical and versatile for everyday surgery

Comfortable, practical and functional: a water-repellent gown with cuff, recommended for short everyday operations and complementing patient protection. Available in sterile and non-sterile versions, based on your needs.

Classification
MD class I s (sterile)
MD class I (non sterile)

Material
Non-woven fabric
Spunbond 30 g/m^2
latex free

Available size
One size

Colors
Green, Light Bluee

Sterility
Sterility guaranteed for 5 years from the date of production

Non-sterile version also available

Versatile
Particularly recommended for visitors and patients, as well as healthcare professionals involved in short procedures or outpatient surgery.

Comfortable
With its perfect fit, it allows you to move around as you normally would without tearing the fabric. Adjustable nonwoven belt and lace fastening around the neck at the back.

Traceable
Each sterile gown is packed in a sterile medical blister pack and complete with barcode to provide maximum traceability.

Details

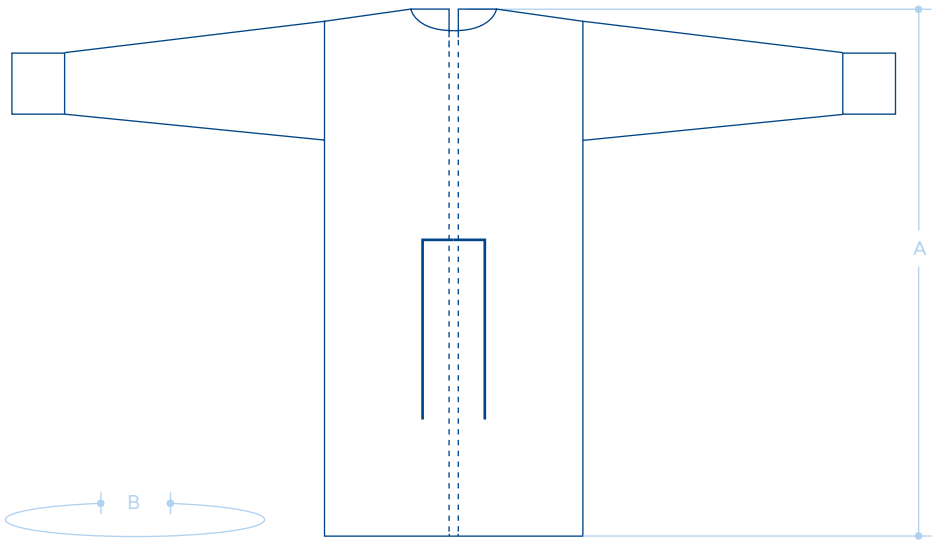

Color		Green	Light Bluee
Code - non sterile		270425	270426
Code - sterile		270427	270428
Pieces		50	50
A	**Length of gown**	120 cm	120 cm
B	**Width of gown**	140 cm	140 cm

SMS Microfiber surgical pajamas

Guaranteed comfort while you work

Short-sleeve surgical scrubs with top and trousers. Made from comfortable, light and water-repellent SMS microfibre material. Non-sterile product.

Classification
MD class I

Material
SMS Microfiber 35 g/m²
latex free

Available size
M, L, XL

Color
Blue

Packaging
Box of 20 pajamas

Flexible

Replaces traditional gowns used for everyday tasks at your clinic.

Comfortable

Very comfortable with short, wide sleeves for ease of movement.

Safe

Flexible and provides perfect protection for the wearer's body.

Details

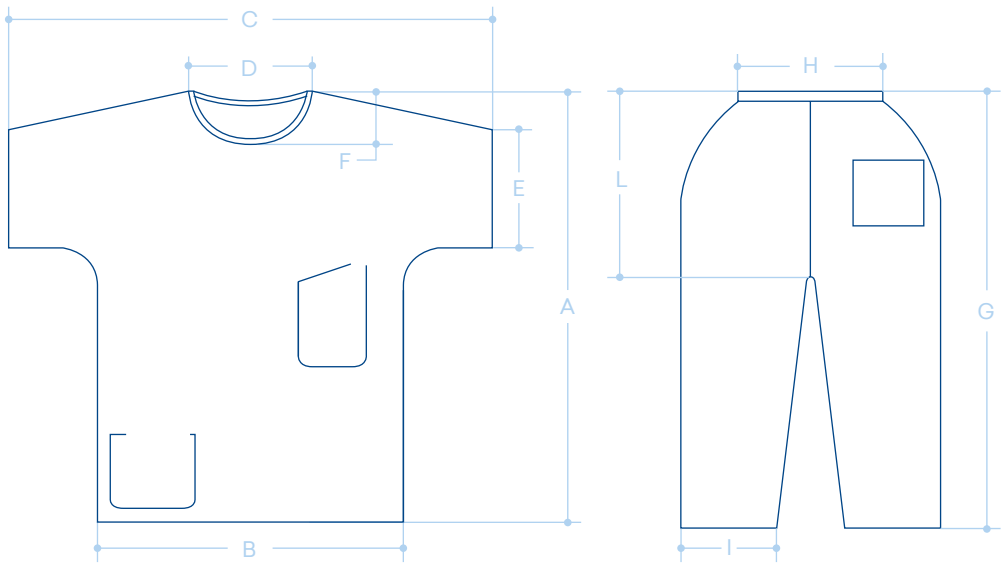

Size		M	L	XL
Code		270415	270416	270417
Pieces		20	20	20
A	**Total length of tunic**	74 cm	76 cm	78 cm
B	**Width of tunic body**	57 cm	60 cm	63 cm
C	**Total width of tunic**	89 cm	95 cm	101 cm
D	**Width of collar**	22 cm	23 cm	24 cm
E	**Width of sleeves**	20 cm	21 cm	22 cm
F	**Depth of neckline**	14 cm	14 cm	14 cm
G	**Total length of trousers**	106 cm	108 cm	112 cm
H	**Width of waist**	54 cm	59 cm	62 cm
I	**Width of leg**	23 cm	24 cm	25 cm
L	**Length of crotch**	28 cm	29 cm	30 cm

Other items of protection

Irreplaceable day-to-day accessories

Our line of complementary accessories includes non-sterile products that provide total protection during any kind of surgical procedure or day-to-day activities at your dental practice. Three and four-layer masks provide a strong protective barrier against pathogenic germs. Glasses and visors protect the wearer from bodily fluids and sprays and aerosols emitted by rotary instruments, air-water syringes and scalers. Scrub caps and shoes covers provide extra safety for surgical teams and patients. High-quality, Monoart latex gloves are perfect for routine activities and everyday check-ups.

Face mask Protection 3

Euronda | Monoart®

Masks with 3 layers of 3 different materials: soft, water-repellent and dyed nonwoven fabric for protection against dust and residue; an anti-particle and anti-bacterial filter with PFE (Particle Filtration Efficiency) and BFE (Bacterial Filtration Efficiency) ratings of > 99%; comfortable, absorbent nonwoven fabric lining for effective absorption of sweat and humidity. Built-in nose bridge. Non-sterile product.

Classification
Medical Device Class I
EN 14683: Type II
ASTM F2100: Level I

Material
Non-woven fabric

Available size
One size

Colors
Light Bluee, Green

CE Type Ref
MONOART® FACE MASK PROTECTION 3

Code	Color	Pcs
217112	Light Blue	50
217114	Green	50

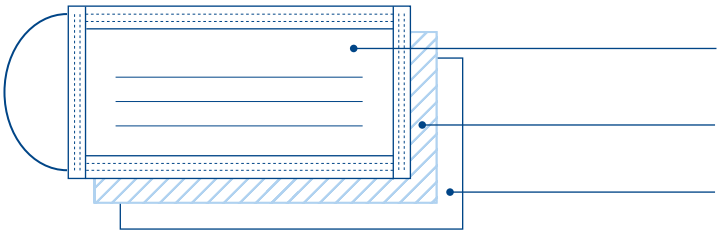

Face mask Protection 4

Euronda | Monoart®

Disposable, hypo-allergenic face mask with 3 layers: soft, coloured and water-repellent non-woven fabric for improved protection against dust and humidity; PFE (Particle Filtration Efficency) and filter BFE (Bacterial Filtration Efficiency) filter > 99%; Comfortable non-woven cotton lining for extra absorbance of sweat and humidity. It is ideal for protection from dust and aerosols: ΔP <3.0 mm H_2O/cm^2 in accordance with the EN 14683 standard (differential pressure: surgical mask breathability rating). Built-in nose bridge. Non sterile product.

Classification
Medical Device Class I
EN 14683: Type II
ASTM F2100: Level I

Material
Non-woven fabric

Available size
One size

Colors
Light Bluee, Green

CE Type Ref
MONOART® FACE MASK PROTECTION 4

Code	Color	Pcs
217132	Light Blue	50
217134	Green	50

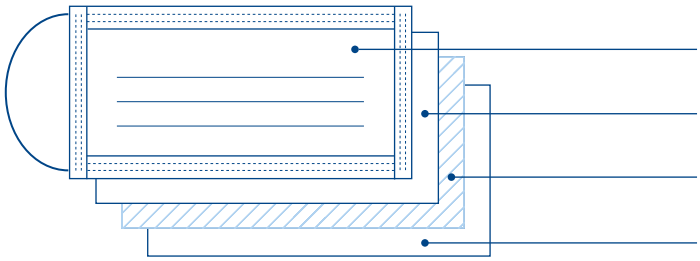

Softesse® cap

Surgical cap with elasticated back. Practical and quick to put on. Made of Softesse® non-woven fabric, which is both exceptionally comfortable and extremely water-repellent. Non-sterile product.

Classification
MD class I

Material
TNT Softesse®

Code	Color	Pcs
270502	Light Blue	50

Round cap with elastic

Round and elasticated nonwoven-fabric scrub cap. Ideal for patients and surgical teams. Non-sterile product.

Classification
MD class I

Material
Non-woven fabric

Code	Color	Pcs
270505	Green	100
270506	Light Blue	100

Bandana

Euronda | Monoart®

Comfortable cotton bandana with adjustable strings, making them adaptable to all head sizes. It can be sterilized at 121°C. Non-sterile product.

Classification
Personal Protective Equipment (European Directive 89/686/EEC)

Material
Autoclavable cotton

CE Type Ref
MONOART® BANDANA

Code	Color	Pcs
262003	Light Blue	10
262002	Green	10

Cap with adjustable ties

Surgical cap with adjustable ties made in non-woven fabric, ideal for all the team. Non-sterile product.

Classification
MD class I

Material
Non-woven fabric

Code	Color	Pcs
270503	Green	100
270504	Light Blue	100

Cube glasses

Euronda | Monoart®

Transparent operator over-glasses can be positioned over any corrective glasses, providing a 180 degree view. Modern and wrap-around design with adjustable frame stems for an excellent fit thanks to the Soft Pad technology. Heavy duty polycarbonate lens, with antiscratch and antifog treatment, that protect against impact and UV400 (sunlight) rays. In accordance with EN166 and EN167.

Classification
Personal Protective Equipment

Color
Frame white and blue

Weight
37 g

Anti scratch Plus

Anti Fog Plus

SoftPad Technology

Code	Pcs
261010	1

Anti Scratch Plus

Anti-Scratch Plus treatment constitutes a barrier against surface damage, it protects against scratches and abrasions. It is certified according to the requirement of EN166 “K”.

Anti Fog Plus

Anti-Fog Plus treatment is a permanent treatment that prevents the formation of condensation. It is certified according to the requirement of EN166 “N”.

SoftPad technology

SoftPad is a patented terminal that has been added to the legs of the eyewear to offer comfort and protection.

Stretch glasses

Euronda | Monoart®

Ultra-flexible, sporty, wrap-around stretch design glasses with adjustable frame stems, ultra-flexible and extremely twist proof to offer an unbeatable comfortable fit. Heavy duty, optically controlled lens with antifog and antiscratch treatment, that protect against UV400 (sunlight) rays. In accordance with EN166 and EN 167.

Classification
Personal Protective Equipment

Color
Frame white and blue

Weight
26 g

Anti scratch Plus

Anti Fog Plus

SoftPad Technology

Code	Pcs
261030	1

Anti Scratch Plus

Anti-Scratch Plus treatment constitutes a barrier against surface damage, it protects against scratches and abrasions. It is certified according to the requirement of EN166 “K”.

Anti Fog Plus

Anti-Fog Plus treatment is a permanent treatment that prevents the formation of condensation. It is certified according to the requirement of EN166 “N”.

SoftPad technology

SoftPad is a patented terminal that has been added to the legs of the eyewear to offer comfort and protection.

Operator Visor

Euronda | Monoart®

Disposable operator visor with transparent frame and replaceable shield. Transparent and anti-fog disposable shield. Ultra light visor.

Classification
Personal Protective Equipment

Color
Transparent frame

Weight
25 g

Anti fog

Code	Pcs
261103	1

Anti Fog

Basic Anti-fog treatment that prevents the formation of condensation.
***N** Anti-fog treatment

Details

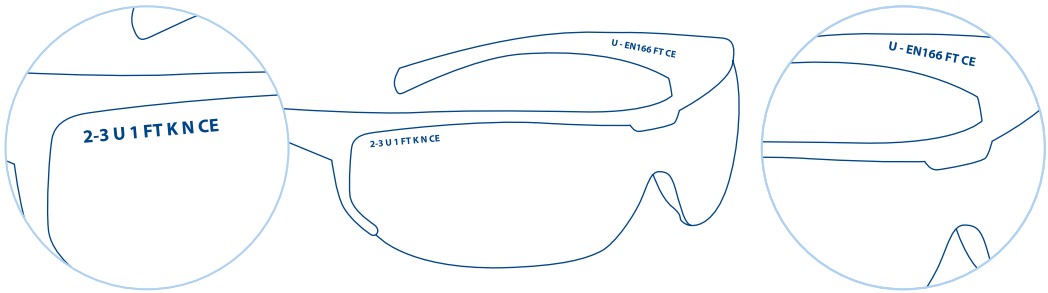

Frame marking identification

U	EN 166	FT	CE
Manufacturer	Standard	Mechanical resistance	

Lens marking identification

2 - 3	U	1	FT	KN*	CE
Scale number (n.code+ shade)	Manufacturer	Optical class	Mechanical resistance	Optional requirement	

Eyewear marking

Added to personal protective equipments (PPE) the marking guarantees respect of current safety regulations. Required by the law, the marking is added both on the lens, to identify scale number, manifacturer, optical class, mechanical resistance and optional requirements, and on the frame to identify manifacturer, reference normative and mechanical resistance.

European Normatives

EN 166 Personal eye-protection - Specifications
EN 167 Personal eye-protection - Optical test methods
EN 170 Personal eye-protection - Ultraviolet filters. Transmittance requirements and recommended use.

Disposable Latex Gloves

Euronda | Monoart®

Safe, comfortable and durable: Monoart® disposable latex gloves provide hygienic, comfortable protection for hands.They are easy to wear, stretchy and guarantee outstanding tactile sensitivity. In addition, the rough micro-texture on the surface gives superb grip in all conditions, so they are ideal for working with complete peace of mind during operations of all kinds.

- Powder-free latex
- Non sterile
- Ambidestro
- AQL 1,5
- Low levels of protein residue (<50 µg/g)

Classification
Medical Devices Class I, pursuant to EN 455-1, EN 455-2, EN 455-3 and EN 455-4

Material
Powder-free latex

Available size
XS, S, M, L

Color
Blue

CE Type Ref
MONOART® LATEX GLOVES

Code	Size	Pcs
260105	XS	100
260106	S	100
260107	M	100
260108	L	100

Waterproof shoe covers

Elasticated protection for footwear. It prevents contamination by limiting the transmission of the microorganisms that are found on the soles of patients and medical staff. Non-sterile product.

Classification
MD class I

Material
CPE

Available size
One size

Color
Blue

Code	Pcs
270420	100

Alle® Sterile drapes

Maximum protection for your surgical field

When procedures for setting up surgical fields are followed, sterile and disposable drapes are used to create an uncontaminated environment, protecting both surgical areas and professionals. A range of different materials, sizes and models are available. They are made with a layer of soft, absorbent and waterproof nonwoven fabric and a layer of polyethylene film to create a protective barrier and reduce the risk of post-operative infections caused by migrating pathogenic germs.

Innovative

Available in breathable, water-repellent Softesse®, and nonwoven fabric coupled with a polyethylene layer, which makes them absorbent and waterproof.

Versatile

A number of varieties are available in different sizes and lengths, including basic draping, drapes with adhesive tape, drapes with central openings and off-centre openings, and drapes with U cuts.

Guaranteed

Individually packaged to guarantee sterility for 5 years and comes with a peel-off label for traceability.

Drapes for Mayo and instrument tables

Designed to cover surgical tables and to protect equipment. Main drapes cover instrument tables, while Mayo tables are protected by pocket-like drapes for better coverage of the table.

Classification
MD class I s

Material
LDPE + Absorbent non-woven fabric 54 g/m²
latex free

Dimension
Available in two sizes

Color
Light Blue

Sterility
Sterility guaranteed for 5 years from the date of production

Mayo table

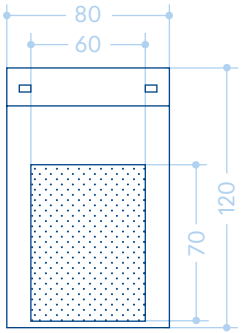

Instrument table

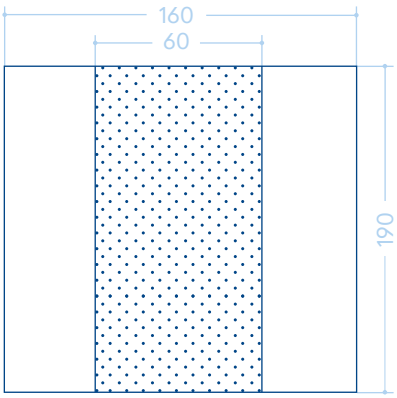

Absorbent non-woven fabric

Mayo table

Code	Size cm	Pcs
270213	80x120	25

Instrument table

Code	Size cm	Pcs
270214	160x190	25

Surgical drapes

The nonwoven fabric bonded with the polyethylene material absorbs bodily fluids without compromising the product's protective barrier. With its outstanding drapability, the 'no-memory' material retains particles without releasing them into the air. Drape available in various sizes that can be adapted to any surface or equipment being covered.

Classification
MD class I s

Material
Non-woven fabric + polyethylene

Dimension
Available in different sizes

Color
Light Blue

Sterility
Sterility guaranteed for 5 years from the date of production

Code		270201	270202	270203	270204	270205
Pcs		125	100	50	25	25
A	**Width** (cm)	50	50	75	100	150
B	**Length** (cm)	50	75	90	150	200

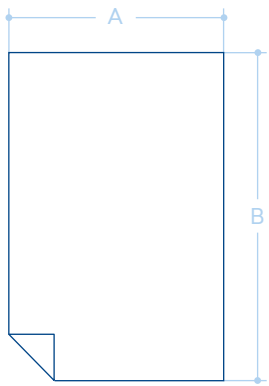

Surgical drapes with adhesive side

A practical 4 cm medical adhesive strip on the shortest side of the drape can be used to secure it to a fixed point, preventing accidental movements and contamination. The drapes are folded so that staff members maintain a clean and sterile environment while handling them. Available in various sizes and packed in sterile medical blister packs. The double adhesive label with barcode means that the product is traceable and easier to store.

Classification
MD class I s

Material
Non-woven fabric + polyethylene

Dimension
Available in different sizes

Color
Light Blue

Sterility
Sterility guaranteed for 5 years from the date of production

Code		270206	270207	270208
Pcs		75	50	25
A	**Width** (cm)	50*	75*	100*
B	**Length** (cm)	75	90	150
C	**Adhesive height** (cm)	4	4	4

*adhesive side

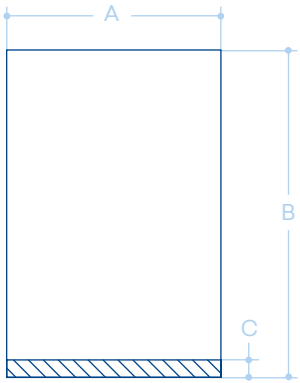

Drapes with central adhesive opening

The adhesive circular shape in the centre of the drape creates an effective sterile barrier for all types of surgical procedures. The drapes are folded so that staff members maintain a clean and sterile environment while handling them. Available in various sizes and packed in sterile medical blister packs. The double adhesive label with barcode means that the product is traceable and easier to store.

Classification
MD class I s

Material
Non-woven fabric + polyethylene

Dimension
Available in different sizes

Color
Light Blue

Sterility
Sterility guaranteed for 5 years from the date of production

Code		270215	270216	270217
Pcs		100	75	50
A	**Width** (cm)	50	50	75
B	**Length** (cm)	50	75	90
C	**Opening width** (cm)	6	6	6
D	**Opening length** (cm)	9	9	9

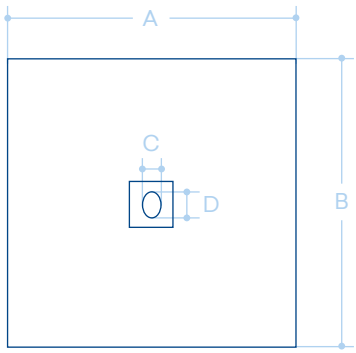

Drape with off-centre adhesive opening

This item has the same features as the drape with central opening, but its off-centre opening enables you to maximise use of the drape's dimensions. The drapes are folded so that staff members maintain a clean and sterile environment while handling them. Available in various sizes and packed in sterile medical blister packs. The double adhesive label with barcode means that the product is traceable and easier to store.

Classification
MD class I s

Material
Non-woven fabric + polyethylene

Color
Light Blue

Sterility
Sterility guaranteed for 5 years from the date of production

Code		270228
Pcs		25
A	**Width** (cm)	100
B	**Length** (cm)	150
C	**Opening width** (cm)	6
D	**Opening length** (cm)	9
E	**From top** (cm)	47

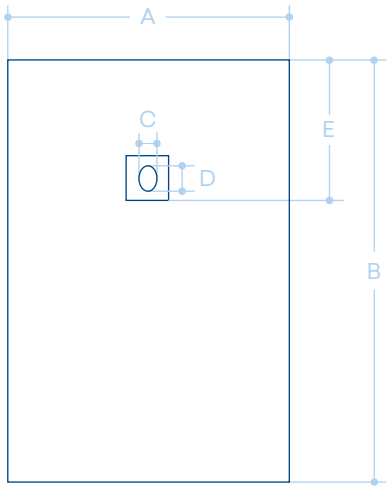

Drape with U cut without adhesive

Practical for surgeons and comfortable for patients: the 'U' shape makes it easy to place on the bottom lip or chin, creating an effective sterile barrier. Individually packaged to guarantee sterility for 5 years and comes with a peel-off label for traceability.

Classification
MD class I s

Material
Non-woven fabric + polyethylene

Color
Light Blue

Sterility
Sterility guaranteed for 5 years from the date of production

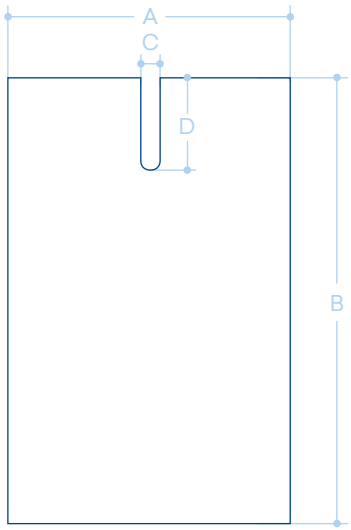

Code		270209
Pcs		25
A	**Width** (cm)	100
B	**Length** (cm)	150
C	**Opening width** (cm)	11
D	**Opening length** (cm)	30

Drape with U cut and adhesive

The “U” shape makes it easy to place both on the bottom lip and on the neck, creating an effective sterile barrier. The practical medical adhesive stops the drape from moving and therefore prevents accidental contamination.

Classification
MD class I s

Material
Non-woven fabric + polyethylene

Dimension
Available in different sizes

Color
Light Blue

Sterility
Sterility guaranteed for 5 years from the date of production

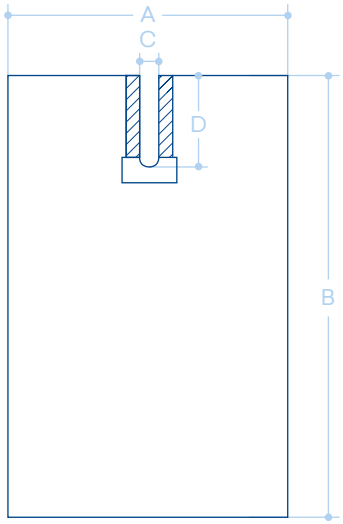

Code		270210	270211	270212
Pcs		50	50	25
A	**Width** (cm)	50	75	100
B	**Length** (cm)	75	90	150
C	**Opening width** (cm)	11	11	6,5
D	**Opening length** (cm)	9	9	30

Drape with U cut without adhesive and adhesive point

The 'U' shape makes it easy to place on the bottom lip or chin. The adhesive part allows you to fix the drape in place, which prevents it from moving and creates an effective sterile barrier. Industry experts maintain that its 115-cm length is perfect for covering patients. Packed in a sterile medical blister pack, drapes are folded so that staff members maintain a clean and sterile environment while handling them. The double adhesive label with barcode means that the product is traceable and easier to store.

Classification
MD class I s

Material
Non-woven fabric + polyethylene

Color
Light Blue

Sterility
Sterility guaranteed for 5 years from the date of production

Code		270230
Pcs		40
A	**Width** (cm)	75
B	**Length** (cm)	115
C	**Opening width** (cm)	15
D	**Opening length** (cm)	25
E	**Adhesive point dimension** (cm)	6x6

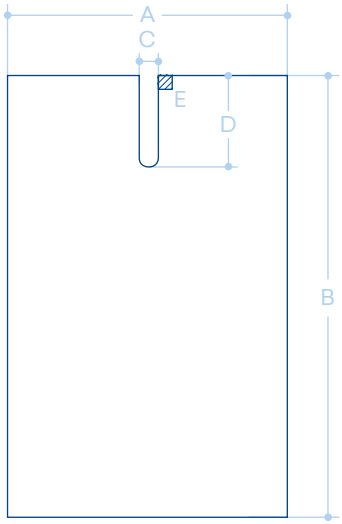

Softesse® drapes

Softesse® nonwoven fabric is the most advanced material available on the market. It is exceptionally comfortable, highly breathable and very water-resistant. Specially designed for long and complex surgical operations. With a variety of different models available, the drapes are designed to satisfy all surgical needs. Packed in a sterile medical blister pack, they are folded so that staff members maintain a clean and sterile environment while handling them. The double adhesive label with barcode means that the product is traceable and easier to store.

Classification
MD class I s

Material
Non-woven fabric
Spunlace Softesse®
70 g/m², latex free

Dimension
Available in different sizes

Color
Light Blue

Sterility
Sterility guaranteed for 5 years from the date of production

Safe

High drapability: once laid out, the material remains in place without moving or slipping.

Breathable

Softesse® prevents body temperature from rising thanks to the material's high breathability.

Non-reflective

The highly opaque fabric minimises the risk of distractions caused by reflective glares.

Some details of the drapes

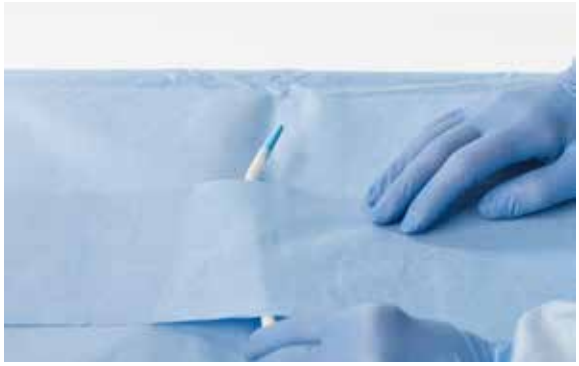

270223
Detail of drape without adhesive U shaped cut and cable hole for aspirator

270224
Detail of drape with adhesive U shaped cut and cable hole for aspirator

270225
Detail of drape with off-centre adhesive opening

Code	**Type**	**Size** cm	**Pcs**
270222	Rectangular drape without adhesive	75x100	40
270223	Drape with U-shaped cut, without adhesive and cable hole for aspirator	133x200 cut 6,5x50	10
270224	Drape with adhesive U-shaped cut and cable hole for aspirator	133x200 cut *6,5x50 *adhesive label	10
270225	Drape with off-centre adhesive opening	100x150 / opening *6x9	25

Softesse® drape with no panic window

Drape with triangular opening and Velcro tube holder. Designed to protect the patient's eyes from accidental injuries and splashes, the drape features a protective window made from see-through material, enabling the patient and dentist to see each other during a procedure. Made from Softesse—the most advanced material on the market—it is exceptionally comfortable, highly breathable and very water-resistant. Studied for lengthy, complex surgical operations, it is packed in a sterile medical blister pack and the double adhesive label with barcode means that the product is traceable and easier to store.

Classification
MD class I s

Material
Non-woven fabric Spunlace Softesse®
70 g/m², latex free

Color
Light Blue

Sterility
Sterility guaranteed for 5 years from the date of production

Practical

It covers the patient from head to toe, acting as a scrub cap, protective drape and gown all in one. Economical and highly practical as it takes very little time to apply.

Ergonomico

Anti-panic window with built-in nose bridge and soft sponge for easy positioning on the patient's face. This enables the patient to interact with the surgeon directly and with ease, and reduces anxiety during surgery.

Safe

Velcro tube holder for greater safety during operations and to reduce the risk of accidentally contaminating the surgical field.

Some details of the drapes

Detail of no panic window and velcro tube holder

Code	270226
Pcs	5
Width (cm)	133
Length (cm)	200
Opening width (cm)	11
Opening height (cm)	10
Window width (cm)	13
Window height (cm)	4,5
Window distance from top (cm)	42
Tube holder distance from top (cm)	90

Alle® sterile and non-sterile protective products

For totally safe surgical environments

A wide range of sterile products designed to protect surfaces and small/medium-size apparatus located near surgical fields, and to keep operating rooms free from contamination.

Safe

These allow you to protect all the equipment and small surfaces in your surgical environment, keeping them sterile.

Practical

Each product is easy to apply, enabling you to set up your surgical field in a quicker and more precise manner.

Traceable

Made with high-quality materials and packed in labelled bags for maximum traceability: Sterility guaranteed for 5 years.

All-purpose bag for radiographic systems

This all-purpose bag is sterile, see-through and allows you to protect radiographic, photographic and microscopic systems, leaving your surgical field totally sterile.

Classification
MD class I s

Material
PLT

Dimension
Ø 75 cm

Sterility
Sterility guaranteed for 5 years from the date of production

Code	Pcs
270316	25

Medical adhesive

Medical adhesive for securing protective sheaths, tubes and drapes, leaving your surgical field safe and sterile.

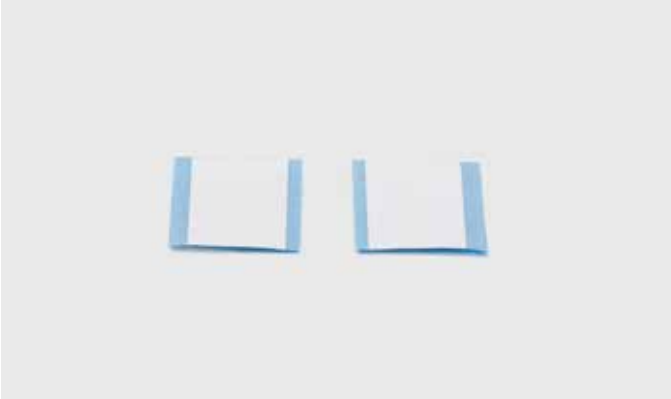

Classification
MD class I s

Material
Non-woven fabric

Dimension
10x5 cm

Sterility
Sterility guaranteed for 5 years from the date of production

Code	Pcs
270315	50 blisters of 2 pcs

Barrier film

Euronda | Monoart®

Disposable film for the protection of areas and surfaces, especially those difficult to reach, clean or disinfect. The light adhesive of the barrier film adheres easily to surfaces without leaving any residue. The barrier film has a non-adhesive edge on both sides, to simplify placement and removal. The use of the barrier film reduces the risk of cross-contamination caused by aerosol and spraying. The pack contains 1 roll of 1200 tear-off 100x150 mm sheets with dispenser.

Classification
MD class I

Material
PVC

Dimension
10x15 cm

Color
Blue

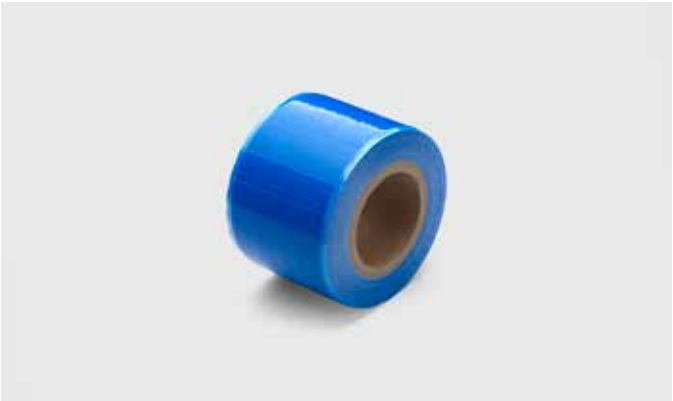

Code	Pcs
269001	1

Tubing sleeve with inserter

Disposable anti-reflective transparent polyethylene tubing sleeve with open ends. Elasticated and complete with a handy card fitter for easy insertion.

Classification
MD class I s

Material
LDPE, latex free

Color
Transparent

Sterility
Sterility guaranteed for 5 years from the date of production

Code	Pcs
270310	10

Tubing sleeve with adhesive fixing tapes

Disposable anti-reflective transparent polyethylene tubing sleeve with open ends. With two Nonwoven fabric adhesive strips for securing the ends.

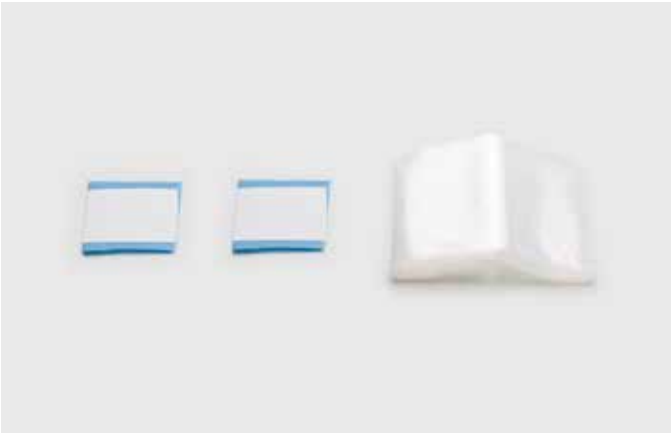

Classification
MD class I s

Material
LDPE, latex free

Dimension
Available in different sizes

Color
Light Blue, white

Sterility
Sterility guaranteed for 5 years from the date of production

Code	**Size** cm	**Color**	**Pcs**
270302	120x7	Light Blue	50
270303	240x7	Light Blue	50
270304	120x7	White	50
270305	240x7	White	50

Adhesive film sheets

Designed to protect surfaces that are exposed to contamination but difficult to clean/sterilise during clinical procedures (control panels, handles, switches, etc.). The adhesive polyethylene material does not leave residue on protected surfaces.

Classification
MD class I s

Material
adhesive polyethylene

Dimension
20x20 cm

Color
Light Blue

Sterility
Sterility guaranteed for 5 years from the date of production

Code	Pcs
270301	50

Transparent drapes with adhesive

See-through, low-density polyethylene drapes with adhesive tape. Perfect for covering physiodispensers and control units. The adhesive tape makes them quick and easy to apply without leaving residue on surfaces. The transparent material is totally see-through, enabling you to use your control panels.

Classification
MD class I s

Material
adhesive polyethylene

Dimension
40*x50 cm
*adhesive side

Color
Light Blue

Sterility
Sterility guaranteed for 5 years from the date of production

Code	Pcs
270227	20

Dentist chair cover

Euronda | Monoart®

Disposable universal dentist chair cover composed by headrest cover, backrest cover and seat cover made in soft nonwoven fabric polypropylene material, hypoallergenic and breathable to guarantee protection and safety for patients. Its universal size fits all dentist chair models thanks to the elasticized seams and handy ties that guarantee complete adaptability. Non-sterile product.

Material
Non-woven fabric 30 g/m²

Color
Light Blue, green

Code	Color	Pcs
264000	Light Blue	25
264001	Green	25

Carving

Alle® sterile irrigation lines

These ensure that dental drills are cooled properly

Proper irrigation during the creation of the implant site is essential for the necessary osseointegration of the implant and, consequently, the procedure's success. Mechanical and manual irrigation lines are compatible with the main physiodispensers and mechanised systems available on the market. All irrigation lines are disposable Class IIa products subject to the requirements of Directives 93/42/EEC and 2007/47/EC.

Compatible

Totally compatible with the main physiodispensers and implant drills on the market.

High quality

Robust plastic materials and high-quality parts, free from phthalates. No scrupulous manufacturing processes.

Sterile

Individually packed in sterile blister packs with labels for maximum traceability: Sterility guaranteed for 5 years.

Mechanical irrigation lines

An appropriate, well gauged jet of liquid coolant is able to bring a dental drill “to the ideal temperature”. This can only be done with an irrigation system that has been specifically created for the different types of physiodispenser available on the market. The soft silicone tips of Alle® irrigation lines can be adapted to the different diameters of wand cooling needles.

Classification
MD class IIa

Material
Silicone, PVC, Phthalate-free ABS, Latex-free

Sterility
Sterility guaranteed for 5 years from the date of production

Details

Code	Type	Models*	Pcs
270601	1/2Y	Suni Satelec 2000/3000/Suni Max Surgi set basic, Surgi set pro 500, Dental surgery unit, Dental Unit DSC Electronic, Sweden&Martina XO Osseo, Sky unit	10
270602	1/2Y	W&H Elcomed 100/200 / Astratech Elcomed 100	10
270604	1	Nouvag TCM3000, MD8000, MD7000, MD10, MD10S, MD11, MD20, MD30	10
270606	1/2Y	De Giorgi Steril Intraplant, Intrasurgery 2.0, Intramatic 2, Intramatic Plus	10
270607	1/2Y	Kavo Intrasept 905 / Mectron Piezosurgery II, Piezosurgery 3, Piezosurgery Touch	10
270609	1/2Y	NSK Surgic XT, Surgic XT Plus, Osseocision®, VarioSurg / Aseptico Aeu 6000-70V, 7000E-70V, 7000L-70V, 17Bv2, 26OS, 707Av2 / Bonart Piezo Surgical System	10
270610	1/2Y T	W&H Implantmed, Elcomed SA-310, Piezomed / Nobel Biocare OsseoSet ™	10
270613	1/2Y	Anthogyr Implanteo, Implanteo Led	10
270616	1/2Y	W&H Elcomed SA-200C / Frios Unit E for Dentsplay	10
270617	1/2Y	KaVo Intrasurg 300/500, Intrasurg 300 PLUS, Intrasurg 1000, Intrasurg, 1000 Air	10
270618	1/2Y	Bien Air Chiropro 980 / BioSAFin Easy Surgery, MyTUTOR / EMS Piezon,Master Surgery® / Esacrom Surgysonic I Surgysonic II, Surgysonic, Moto	10
270621	1	Kavo MASTERsurg, EXPERTsurg	10
270622	1	Nouvag Physiodispenser 2000	10

Code	Model	Pcs
270626	Extension line for irrigation set with luer lock connector	10

Legend

1 - Single irrigation
1/2 - Internal and external irrigation without a Y-connector
1/2Y - Internal and external irrigation with a Y-connector
T - Tap to connect a second irrigation line to a second handpiece or to connect an irrigator

*All brands mentioned are registered and owned by the producers.

Manual irrigation line

A manual irrigation system with a button-based flow regulator that enables assistants to keep the implant site clean and cool. The system is also suitable for irrigation during the final fixation of implants using a torque wrench.

Classification
MD class IIa

Material
transparent PVC

Sterility
Sterility guaranteed for 5 years from the date of production

Code	Pcs
270630	5

10 excellent reasons to choose the Euronda Alle® irrigation lines

1 **Versatile**
Ideal for internal Single Irrigation, with the possibility of internal and external irrigation.

2 **Compatible**
With the most common physiodispenser models and mechanised systems.

3 **Packaging**
Packed individually in sterile blister packs.

4 **Traceable**
Double adhesive label provided for maximum traceability.

5 **Guaranteed**
Alle ® products guarantee you all the reliability, functionality and quality of the Euronda brand. The highest quality standards on the market.

6 **Sterility**
Sterilised with ethylene oxide, following a scrupulous process compliant with the regulations in force regarding residue.

7 **Free from latex and phthalates**
For complete respect for patients' health and the environment.

8 **Five-year validity**
The sterility of the Euronda Alle irrigation lines is valid for 60 months.

9 **Quality**
The Alle® line offers the highest quality standards on the market, with no compromises.

10 **Complete**
Equipped with an "Open/Close" perforator with cap, air filter and silicone tip to facilitate insertion.

Alle® Aspiration systems

These provide accurate aspiration

A selection of aspiration products recommended for all surgical procedures that require accurate aspiration without compromising visibility in the operating field.

Surgical aspirators

Practical, light and manageable during long sessions of surgery. A special system prevents the connectors from accidentally bending or twisting. They can be connected to dentist chairs or central systems. Yankauer aspirator tip available with 2.5 mm openings.

Classification
MD class IIa

Material
Transparent PVC

Sterility
Sterility guaranteed for 5 years from the date of production

Senza cannula

Code	Size cm	Pcs
270650	length 220	10

Con cannula Yankauer

Code	Size cm	Pcs
270651	length 250	10

Surgical aspirator tip

Sterile surgical aspirator tip, available with 2,5 mm and 4,8 mm tip openings. The 4,8 mm tip consists of the bent aspirator tube without the light blue tip. PVC adaptors included (11 mm, 16 mm).

Classification
MD class II a

Material
PVC

Dimensioni
Ø 2,5 mm
Ø 4,8 mm - without tip

Sterility
Sterility guaranteed for 5 years from the date of production

Code	Pcs
270644	20

Aspirator Tip

Euronda | Monoart®

Universal moulded tip for surgical aspirator.
Can be sterilised in autoclave at 134°C.

Classification
MD class IIa

Dimension
Connection diameter:
11 mm;
Length: 200 mm

CE Type Ref
MONOART®
CANNULA EM40, EM40
ASPIRATOR TIPS, EM40
ABSAUGKANÜLEN

Code	Pcs
22910110	10

Adapter for Aspirator Tip

Euronda | Monoart®

Practical, safe and can be sterilised in an autoclave at 134°. Can be used to adapt from an inlet with a diameter of 16 mm to an outlet with a diameter of 11 mm.

Classification
MD class IIa

CE Type Ref
MONOART®
ADATTATORE PER CANNULA, ADAPTER POR ASPIRATOR TIPS, ADAPTER FÜR ABSAUGKANÜLEN

Code	Pcs
230002	10

Other products

Useful components to support activities

All of Euronda's safety and experience in a selection of disposable products used for everyday dental and sterilisation procedures. These products are highly tested and stand out due to their high-quality materials, efficiency, safety and effectiveness.

Instant Ice

Thanks to its formula, Euronda Monoart® K2P-Cellulose is one of the best products of its kind on the market in terms of the cold produced, duration, functionality, patient safety and the aesthetic appeal of the packaging. The new mixture of nitrogenous salts guarantees better quality and longer lasting cooling, while the smaller size of the bag gives greater concentration in the treatment zone and takes up less space.

Classification
MD class IIa

Dimension
150x175 mm

Shelf life:
5 anni

CE Type Ref
MONOART®
GHIACCIO ISTANTANEO
INSTANT ICE
KÄLTEKOMPRESSE

Code	Pcs
23230020	24

Sterilization rolls

Sterilization rolls are made of the best certified materials: heavy weight medical paper (60 g/m²) and a double layer of light blue polyester/polypropylene film. This gives them a guaranteed seal during sterilization, makes them extremely easy to open without releasing fibres or tearing, and offers maximum microbial protection. If stored properly, they can be sterile for up to 6 months.
In addition, the chemical colour indicators signal a successfully completed cycle in the autoclave, thus guaranteeing maximum safety for patients.

Code	Size	Pcs
20410591	5 cm x 200 m	8
20410352	7.5 cm x 200 m	5
20410353	10 cm x 200 m	4
20410354	15 cm x 200 m	2
20410356	20 cm x 200 m	2
20410357	25 cm x 200 m	1
20410358	30 cm x 200 m	1
20410590	40 cm x 200 m	1

Classification

DM Class I products fully compliant with Directive 93/42/EEC (as amended by 2007/47/CE) and the EN 868-5 standard.

Dimension

Available in different sizes

CE Type Ref

EUROSTERIL® ROTOLI PER STERILIZZAZIONE, STERILIZATION ROLLS, STERILISATIONS ROLLEN

Sterility

6 months sterility from the date of production in ideal storage conditions and subject to validation of the sterilisation and sealing process

Gusseted sterilization rolls

Euronda | Eurosteril®

Gusseted rolls made of medical high weight paper (60g/m²) and double layer film of polyester/ polypropylene, maintaining the durability of the instrument's sterility up to 6 months.

Classification
MD class I

Dimension
Available in different sizes

CE Type Ref
EUROSTERIL® ROTOLI PER STERILIZZAZIONE, STERILIZATION ROLLS, STERILISATIONS ROLLEN

Sterility
6 months sterility from the date of production in ideal storage conditions and subject to validation of the sterilisation and sealing process

Code	Size	Pcs
20410355	20x5 cm - length 100 m	2
20450036	25x5 cm - length 100 m	1
20410359	25x6,5 cm - length 100 m	1

Sterilization pouches

Euronda | Eurosteril®

Thermal-welding standard sterilization pouches made of heavy weight (60 g/m²) white medical paper coupled with a light blue polyester/polypropylene layer. Three sided weldings with impermeable and uniform canals for the highest microbe protection. The changing chemical colour indicators verify the sterilization process by steam or EtO gas (ethylene oxide). Appropriate peeling without the release of paper fibres or laceration of the film at the moment of opening the packaging.

Classification
MD class I

Dimension
Available in different sizes

CE Type Ref
EUROSTERIL® BUSTE PER STERILIZZAZIONE, STERILIZATION POUCHES, STERILISATIONS BEUTEL

Sterility
6 months sterility from the date of production in ideal storage conditions and subject to validation of the sterilisation and sealing process

Code	**Size** cm	**Pcs**
20310655	5x25	500
20310622	7,5x25	500
20310623	10x25	500

Helix test

Euronda | Pro System®

Test for Class B autoclaves to evaluate the capacity of penetration of the steam in hollow loads. Composed of a tube and 250 colour testers to confirm sterilization.

Code	Pcs
242005	1

Bowie & Dick test

Euronda | Pro System®

Test for Class B autoclaves to evaluate the penetration efficiency in porous loads.

Code	Pcs
243001	10

Prion test

Test for Class B autoclaves, calibrated with the temperature, time and pressure parameters considered effective in 134°C Prion sterilization cycles (134°C x 18 minutes). Composed of 200 colour testers.

Code	Pcs
242004	1

2019© **Euronda Spa** - credits: www.otium.tv & www.superagency.net

Euronda Spa © 2019

This catalogue
cannot be copied,
scanned or reproduced
by any means.
All rights reserved.

Picture, description,
quoting, dimension
and technical data
have to be considered
as purely indicative.

While maintaining the
basic characteristics
of the product, the
manufacturer reserves
the right to make
modifications at
any time with the sole
aim of improvement.

Euronda Spa

Via Chizzalunga 1
36066 Sandrigo
Vicenza, Italy
t (+39) 0444 656111
f (+39) 0444 656199
m info@euronda.com
www.euronda.com

Deutschland

Euronda Deutschland GMBH
Am Landwehrbach 5
48341 Altenberge, Deutschland
t (+49) 2505 9389 0
f (+49) 2505 9389 29
m info@euronda.de
www.euronda.de

France

Euronda France Eurl
ZAC les Vallées, Avenue de Bruxelles
60110 Amblainville, France
t + 33 (0) 3 44 06 69 70
f + 33 (0) 3 44 02 03 89
m info@euronda.fr
www.euronda.fr

España

Euronda Spa
Identyd, Av. Cabezo de Torres 4
30007 Murcia, España
t 900102034
m info@euronda.es
www.euronda.es

Russia

OOO Finstar
5/2a Varshavskaya str.
196128 St. Petersburg, Russia
t + 7 (812) 635 88 94
m info@finstartech.ru
www.euronda.com.ru

990312 - Rev.00 - 02/2019

Euronda®